DIRECTIONAL VALVE

(Piloted 2-Position 2-Way Spool, Normally Closed, Internal Vent)

Ordering Code: **DD-10W-X-Y-Z**

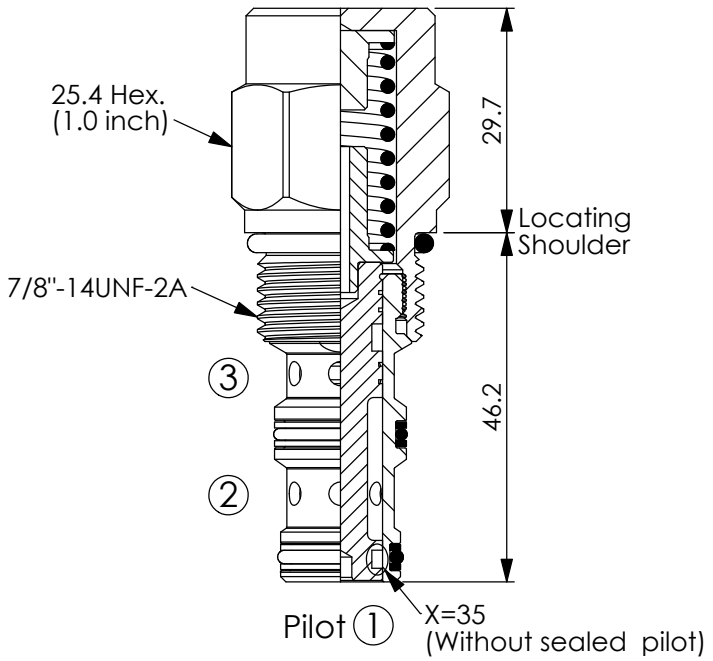

UNIT:mm

Illustrations / detail are for reference only. Data subject to change.

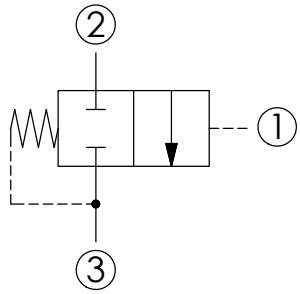

TECHNICAL DATA

Max. pressure:	350	bar
Rated flow:	40	l/min
Cavity-Tooling:	10W-3	
Installation torque:	35 - 45	Nm
Weight:	0.164	kg

· Back pressure of Port ③ will increase pilot pressure of Port ① at ratio 1:1, plus pressure of bias spring.

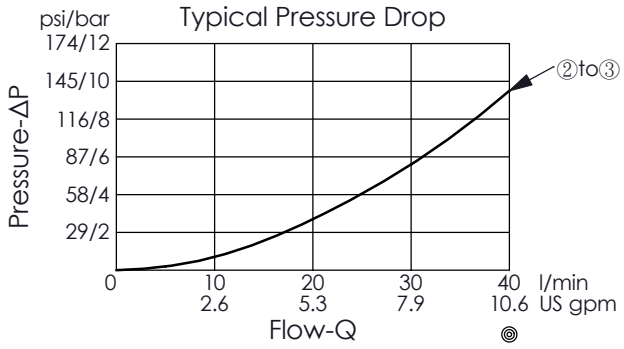

X	OPERATION	
35	Normally Closed (Port ① spool without sealed pilot)	
3E	Normally Closed (Port ① spool with sealed pilot)	

· Maximum Leakage Approximately (82 cc/min./210 bar)

Y	SPRINGS	
	Cracking pressure	
76	7.6 bar	

Z	OPTIONS	
N	Non-adjustable	