DIRECTIONAL VALVE
(Piloted 2-Position 3-Way Spool, Internal Vent)

Ordering Code:	**DD-10W-X-Y-Z**

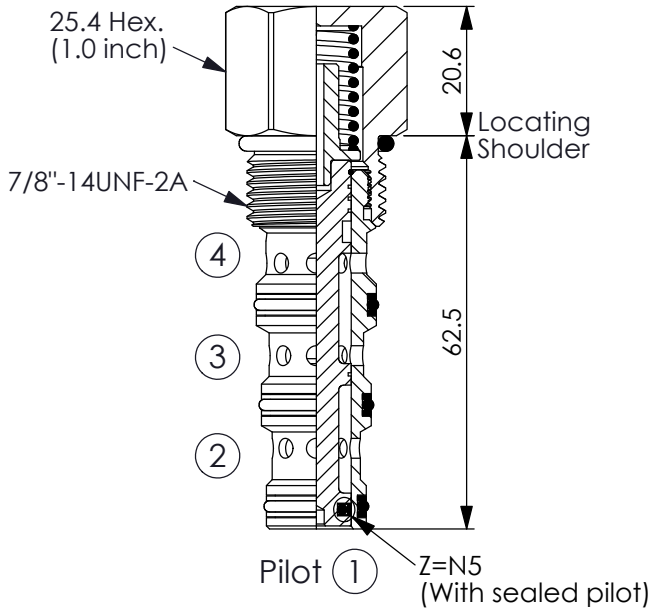

UNIT:mm

Illustrations / detail are for reference only. Data subject to change.

TRANSITION:

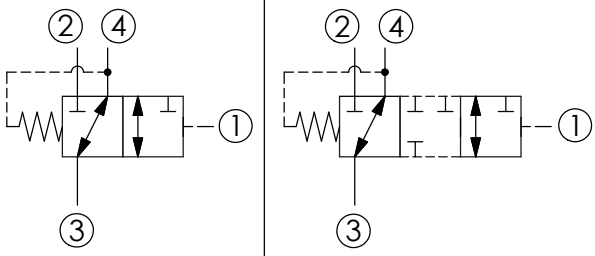

TECHNICAL DATA

Max. pressure:	240	bar
Rated flow:	38	l/min
Cavity-Tooling:	10W-4	
Installation torque:	35 - 45	Nm
Weight:	0.159	kg

- Back pressure of Port ④ will increase pilot pressure of Port ① at ratio 1:1, plus pressure of bias spring.

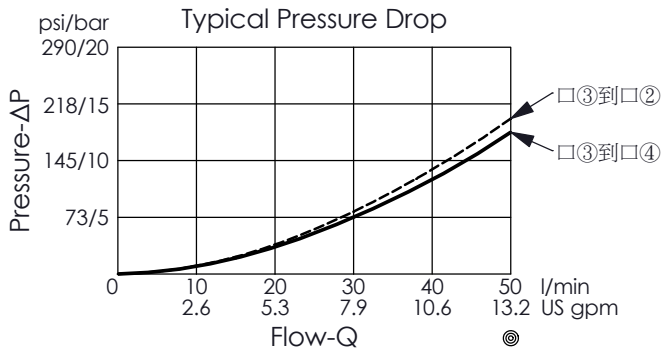

X	OPERATION	
43	Port ③ to Port ④; Port ① pilot to shift, Port ③ to Port ②	

- Port② 、Port③ 、Port④ of Maximum Leakage Approximately (50 cc/min./240 bar)

Y	SPRINGS	
	Cracking pressure	
55	5.5 bar	
76	7.6 bar	
110	11.0 bar	

Z	OPTIONS	
N	Non-adjustable, The transition between positions is closed. (Port ① spool without sealed pilot)	
N5	Non-adjustable The transition between positions is closed. (Port ① spool with sealed pilot)	