RELIEF VALVE
(Dual Pressure, Pilot Operated)

Ordering Code:	**RH-11A-X-Y-G**

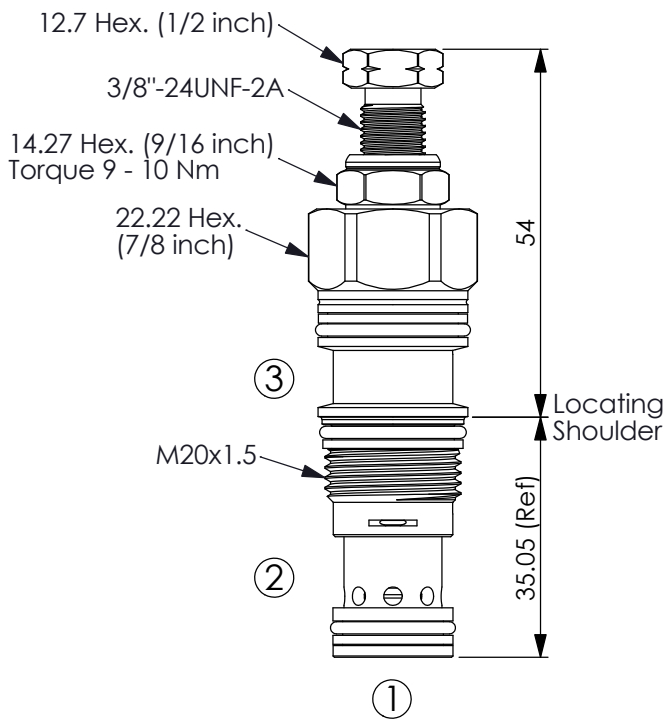

UNIT:mm

Illustrations / detail are for reference only. Data subject to change.

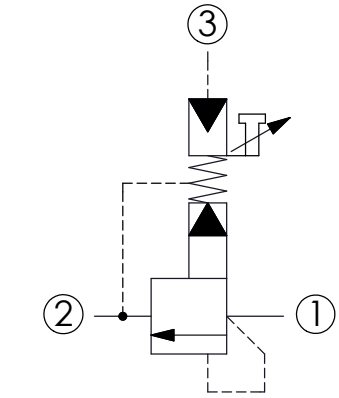

Example: Application Example

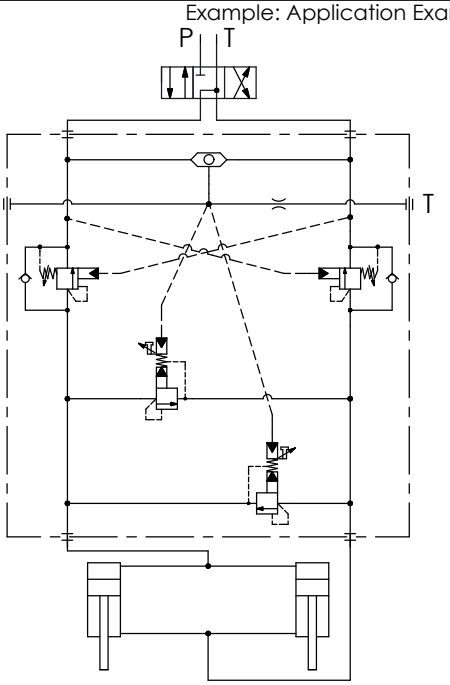

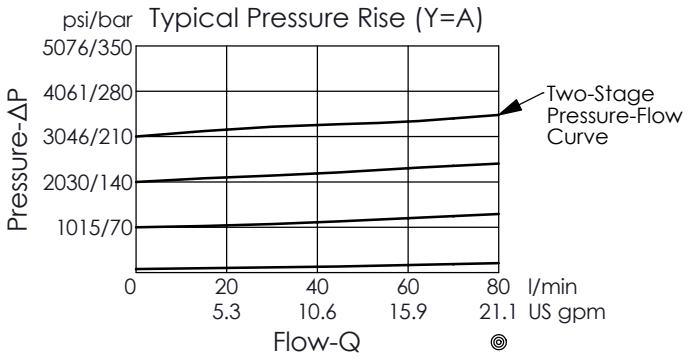

TECHNICAL DATA

Max. Operating pressure: 210 bar
(Maximum pressure 210 bar at Port ② or Port ③ [the port connected to the spring chamber].)

Rated flow:	60	l/min
Cavity-Tooling:	11A-3	
Installation torque:	40 - 50	Nm
Weight:	0.138	kg

Y	SPRINGS
	ADJUSTMENT RANGES
A	7 - 210 bar (70 bar Standard Setting)

· One-Stage Pressure: Screw adjustment, the adjustment is around 53 bar/turn. (Port ① to Port ②).
· Two-Stage Pressure: Pilot pressure at Port ③ exceeds 11 bar. (refer to performance curve).

B	3.5 - 105 bar (70 bar Standard Setting)	
D	1.7 - 55 bar (28 bar Standard Setting)	

· If pressure exceeds 210 bar, please select RH-11A-30-Y-L. For inquiries, please contact the Winner sales department.

X	OPERATION
30	Standard Type

· Response Time-Typical (10 ms)
· Maximum Leakage Approximately (30 cc/min./70 bar)
· Pilot Ratio 28 : 1

Z	OPTIONS	
G	Hex. Wrench Adjustment	