CAVITIES-TOOLING

Cavity-Tooling:20W-2

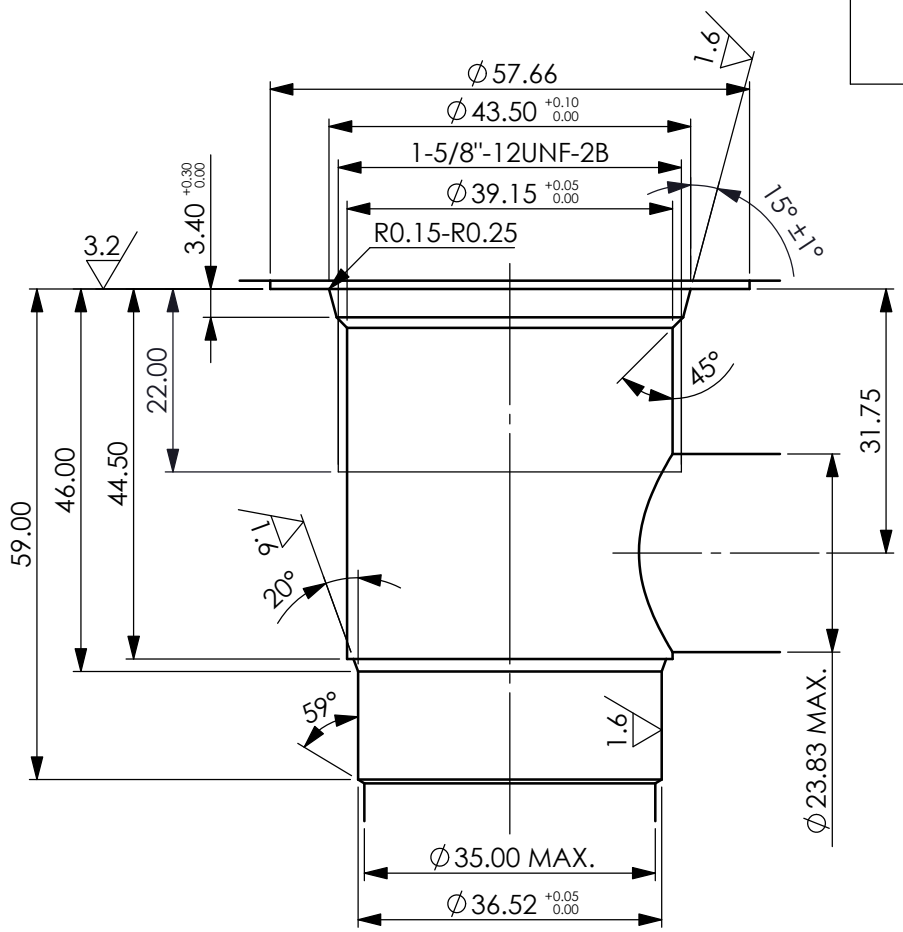

◎	0.03
⊥	0.02

General tolerance: ±0.3
UNIT:mm

Cavity-Tooling:20WB-2

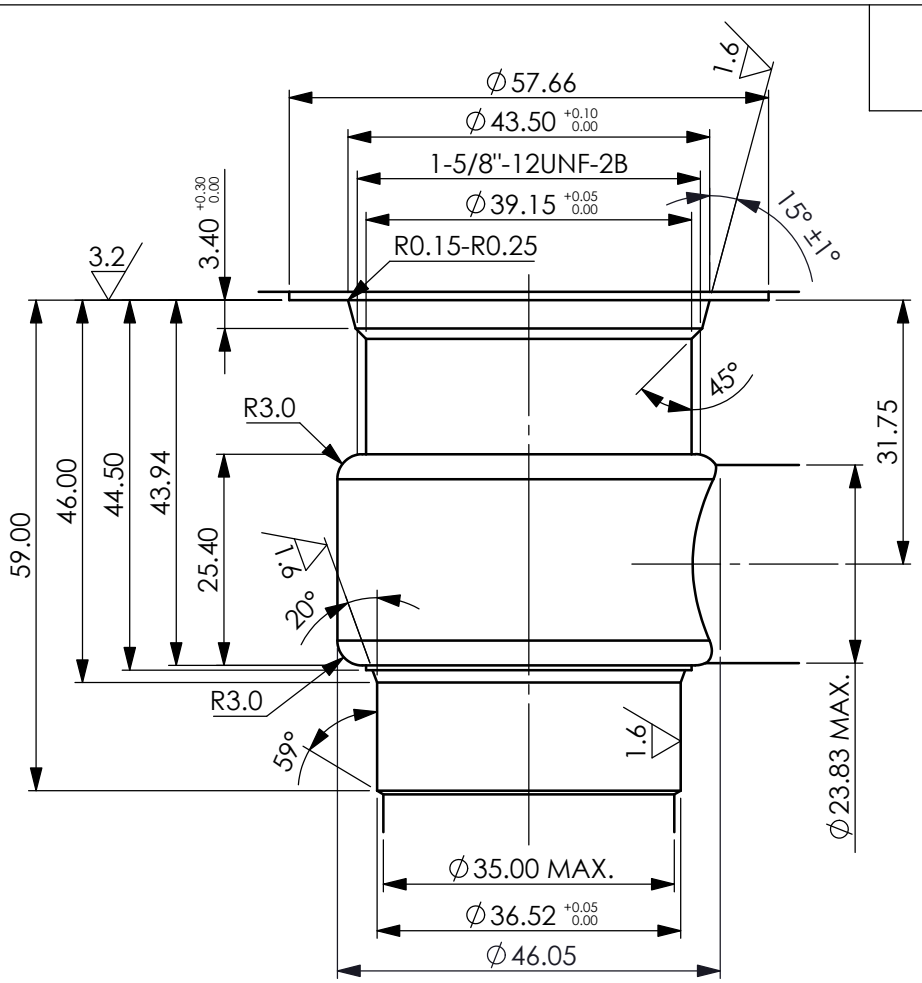

◎	0.03
⊥	0.02

General tolerance: ±0.3
UNIT:mm