CAVITIES-TOOLING

Cavity-Tooling:11A-3

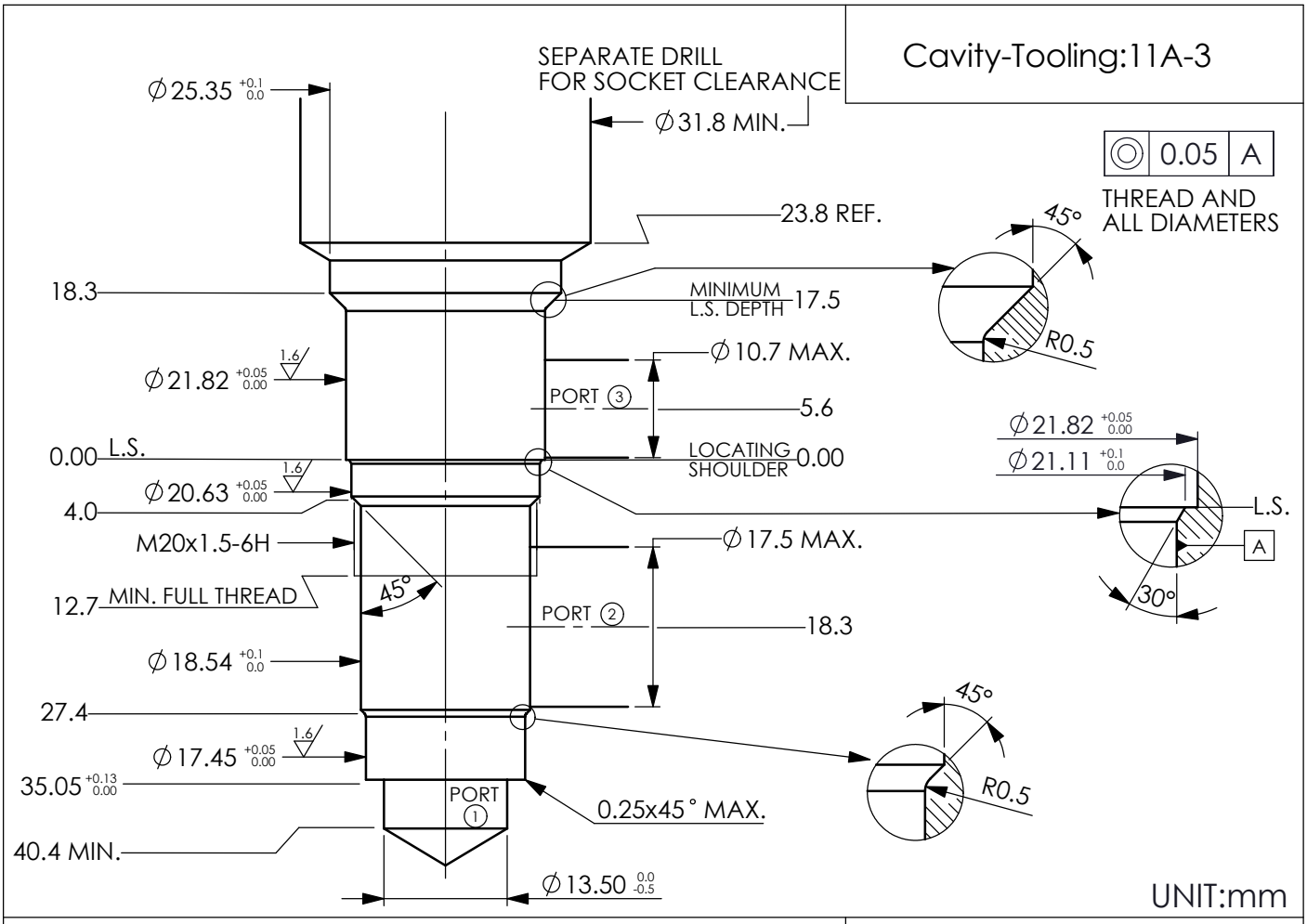
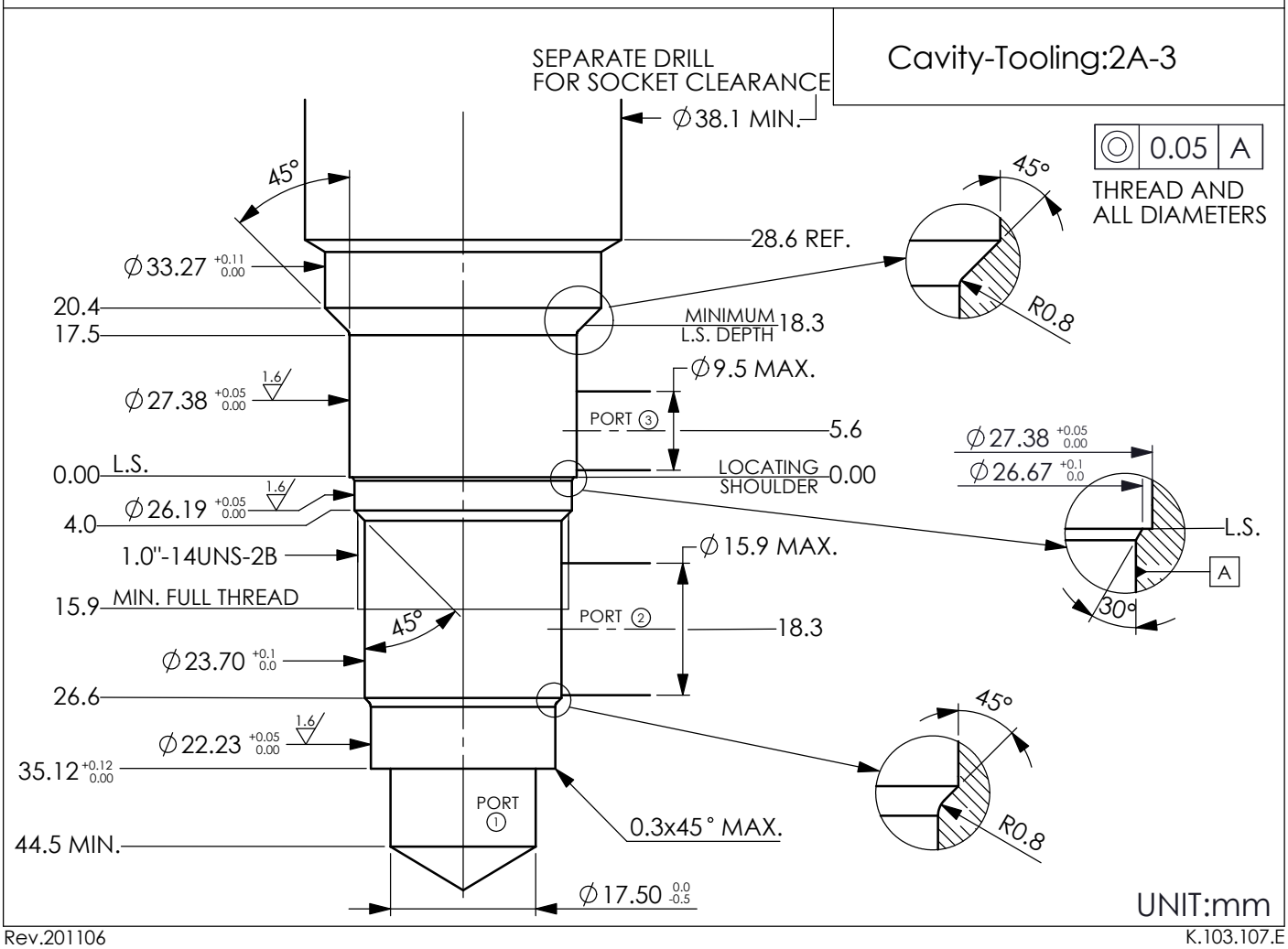
Cavity-Tooling:2A-3